DORNIER

INSIDER

Customer magazine of Lindauer DORNIER GmbH / No. 8 / July 1998

Contents

DORNIER goes Internet

You can find the Insider on the Internet using the following address:

HTTP://WWW.LINDAUER-DORNIER.COM

Portrait of a successful wool weaver in Borgosesia, Italy

LANIFICIO LUIGI COLOMBO SPA – A LEADER IN THE PRODUCTION OF EXCLUSIVE CASHMERE FABRICS

Three fundamental principles form the basis for the international success of Lanificio Luigi Colombo SpA, as one of the most renowned weavers of cashmere fabrics anywhere in the world:

- **An extensive commitment to the careful selection and rigorous testing of the best raw materials. The company's own testing laboratory, equipped with modern testing instrumentation, sets the highest standards and only the absolutely best quality raw material is approved for subsequent manufacturing.**
- **The quality consciousness, ability and professional knowhow of a very young and motivated group of employees are encouraged to continually improve by means of ongoing training programs.**
- **State-of-the-art machinery and modern technology enable the employees to transfer their ability and professional knowhow to the product – a product that ultimately satisfies the highest demands of customers worldwide.**

Processing the finest and very exclusive yarns requires the most careful handling by the filling insertion system on the weaving machine. And these yarns are not only cashmere, but also include alpaca, angora wool, mohair, camelhair, guanaco and cashgora. The breaking strength of very fine and delicate yarns such as cashmere up to a count of Nm 70/2 and virgin wool with a count of Nm 60/1, in some cases can be lower than 5 RKM.

The technology of the weaving machine

The DORNIER Rapier Weaving Machine, with positive filling transfer in the center of the shed, the limited overstroke of the rapier and the extremely low speed of the rapier during pick up of the filling, meets the requirements determined by the characteristics of the yarns themselves. The high degree of versatility necessary to weave this exceptional range of yarns, and a large variety of patterns utilizing a wide range of weave constructions, are also well taken care of by this weaving system.

According to Mr. Marco Goldin, Technical Manager of the company, the most significant development in weaving machine technology during the last 10 years is the new DORNIER leno device, EcoLeno® (see page 5). The advantages are decisive for a weaver of expensive yarns, such as Lanificio Luigi Colombo SpA. As a result of the deployment of this double-disc leno device, patented by DORNIER, a certain amount of the very expensive yarn can be saved. And

A selection of cashmere fabrics produced by Colombo SpA

Mr. Marco Goldin, Technical Manager of the Colombo company in conversation with Mr. Egon Wirth of DORNIER

thanks to the elimination of the catch selvedges and the use of a leno yarn made from one component fiber, the amount of filling waste still remaining can be recycled (leno and filling yarn composed of the same fiber).
The stress exerted on the warp ends in the vicinity of the cloth selvedges during the weaving process is considerably reduced. This results in a reduction in warp stops during the weaving process, thus also reducing weaver workload.

Sufficient reasons for our customer to invest in 26 new DORNIER rapier weaving machines, type HTVS 8/S this year, subsequent to a series of orders placed during the period 1973 through 1996.

The history of the company

The history of Lanificio Luigi Colombo SpA is a history of success characterized by a dynamic and courageous entrepreneurship.
At the end of the 60's the founder of the company, Mr. Luigi Colombo, decided to branch out on his own to develop his own new ideas based on many years of experience he had gained with a leading weaver of wool fabrics.
In a very short time double-face fabrics of the highest quality caught the attention of famous fashion houses such as Giorgio Armani, Mila Schön, Valentino, Christian Dior, Hermès, Gian Franco Ferré, Prada, Gianni Versace, Escada and Jil Sander, to name a few. And Luigi Colombo rapidly gained the reputation of being very avant garde and creative among the leading wool weavers.
At the end of the 70's the three sons of the founder, Giancarlo, Roberto and Paolo, joined the company. The sons quickly assumed important strategic positions in the company. Giancarlo took over the responsibility in manufacturing, Paolo became CFO and Roberto as CEO was in charge of marketing.
Today the company is a vertical operation, covering combing, spinning, preparation, weaving, dyeing and finishing, with some 220 employees.
Of the one million meters of fabric produced last year, about 70 % was cashmere and this means that 220 tons of raw cashmere was processed. Both the development and the success of Luigi Colombo are considerable. In 1997 gross sales reached Lit. 75 billion with exports accounting for 60 % of this total. During the current year, Lit. 20 billion are being invested in the construction of a new 17,500 m^2 facility in Borgosesia.

A company on such a high road to success with a lot of innovative ideas has earned international recognition. Membership in the Club Europe's 500, a prize awarded by Deloitte Touche Tohmatsu International, and also from the European for Management Development, and a finalist as "Company of the Year" from Ernst and Young are testimony to this recognition.

New Products

First and foremost it is the products themselves that have earned distinction. New developments such as the pure cashmere fabric "Summer Flow", an extremely lightweight fabric with a yarn count of Nm 70/2, the "Super 150 Flynder" style with a wool fiber fineness of 15.5 microns, or "Natural Comfort" containing high twist wool yarns that give the fabric stretch characteristics as if it contained an elastomeric yarn. These are examples of ability and technological skill that cannot be imitated, thus also securing success in the future for Lanificio Luigi Colombo SpA.

THE NEW DORNIER DOUBLE-DISC LENO DEVICE, TYPE "ECOLENO®"

The consequential further development of the already tried and proven Disc-O-Leno® (see Insider No. 7) has resulted in the introduction of the EcoLeno®. This development constitutes another innovative step forward in the economics of the DORNIER Weaving System and its family of air jet and rapier weaving machines.

Modular in design, the patented EcoLeno® essentially consists of two full-turn leno devices working synchronously as one unit. The first of the two leno cords is used to form the fabric selvedge, while the second functions as the catch selvedge. The direction of rotation is reversible, a required feature determined by the principle of the system.
As a result of this application of full-turn leno technology, it is now possible for the first time to form the catch selvedge economically with only 2 leno ends. Consequently, by forming the catch selvedge with only 2 ends this creates the entirely new possibility of recycling waste. The advantages for our customers are:

- Reduction in the amount of filling and catch selvedge waste.
- Reuse of filling waste.
- Ability to produce filling waste that consists of only one type of yarn or fiber.
- Elimination of the catch selvedge spools and creels.
- Reduction in warp stops in the selvedge area.
- Reduced workload for both the weaver and the technician.
- Less time requirement during a style change.
- Modular construction.
- Selvedges with improved appearance and better quality.
- No limitations in weaving speed due to the leno device.
- Quicker width changes on jacquard machines.
- Increase of 22 mm in useable reedspace on jacquard machines.
- Reduction in the consumption of spare parts.
- Retrofitable on all DORNIER weaving machines with the CAN-Bus system of monitoring and control.

The following outline explains these advantages in more detail.

Waste saving

In the case of the rapier weaving machine and depending on the field of application, a reduction in filling waste of 2-4 cm per inserted pick is possible. And this without affecting the tried and proven open shed method of filling insertion with positive filling transfer in the center of the shed, as utilized by our weaving system.

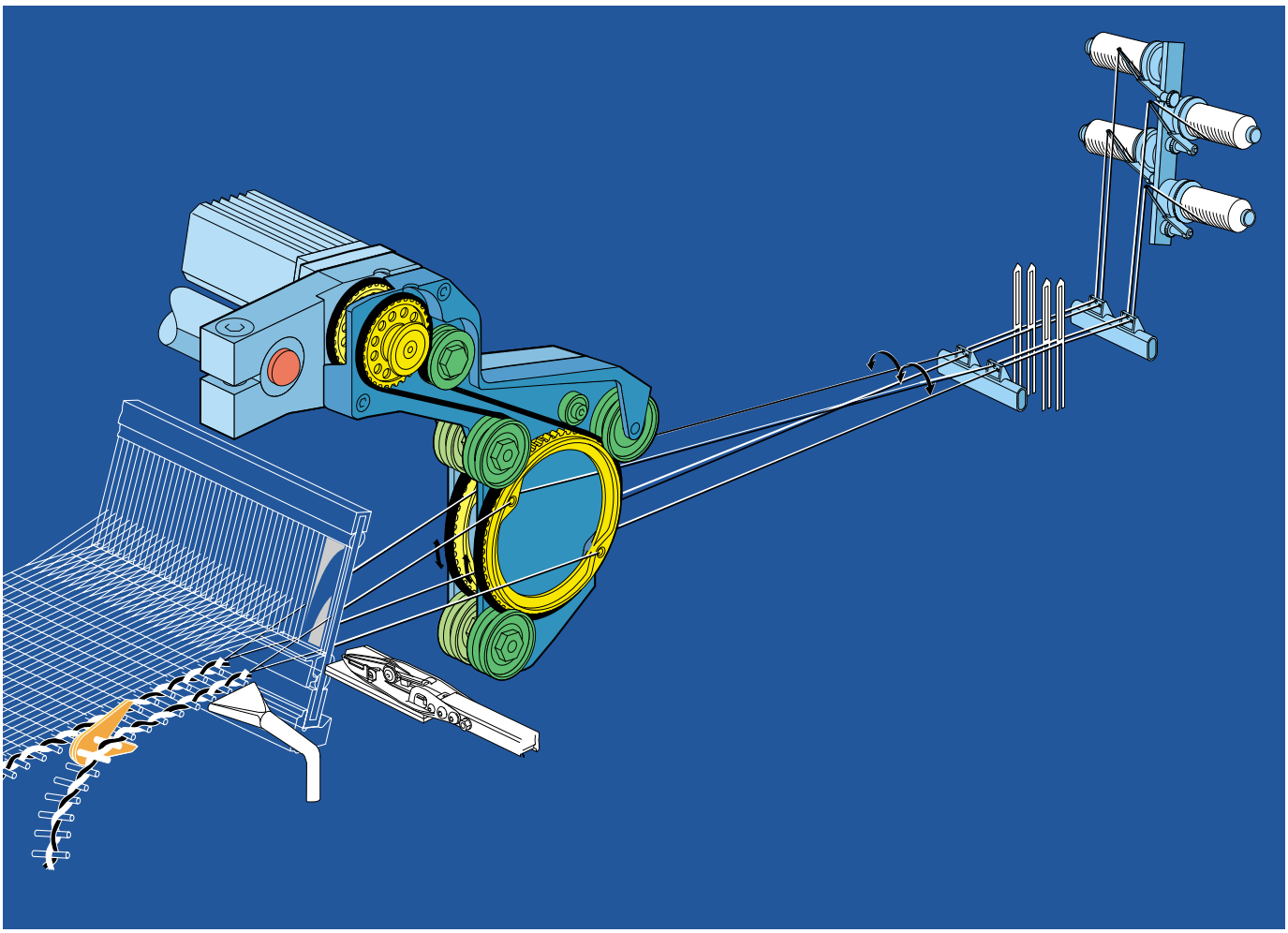

The EcoLeno® Double-disc Leno Device

Recyclable cashmere filling waste with EcoLeno® technology

Recycling filling waste

With 2-end technology and the firm binding of the full-cross leno, it is possible for the first time to recycle the waste and conserve the integrity of the reclaimed fiber, since the proportion of ends in the catch selvedge that are very difficult to tear apart during reclamation is reduced to a minimum. Since for all wool fabrics a catch selvedge thread of 100 % wool can be used, the waste contains only one type of fiber or yarn and can therefore be reused in yarn manufacturing.

In the case of cashmere fabrics, for example, two wool ends are used in the catch selvedge. Practical experience has shown that the proportion of these two wool ends in the total volume of fiber is so low, the waste can still be considered as containing only one component fiber, since this very low amount of foreign fiber is admissible.

We are in a position to provide you with relevant information regarding the suitability of fiber reclamation equipment. However, in actual practice our customers have made use of the fact that they can ship waste containing one component fiber to the yarn manufacturer for reclamation and subsequent recycling. In effect, weaving without any filling waste from the commercial standpoint and for the very first time has been realized by DORNIER.

Elimination of the catch selvedge spools

Due to the fact that the two catch selvedge ends used by the EcoLeno® are supplied from stationary packages such as king spools that are tensioned individually, the usual types of catch selvedge spool can be completely eliminated in the majority of applications. This constitutes a considerable reduction in costs. First of all, the total cost of producing these spools, including material, can be saved. The setup time during QSC, in the preparation department, or in replacing empty spools on the weaving machine is also eliminated.

Reduction in warp stops in the selvedge area

Statistical analysis of short-term stops on the weaving machine show that 8-13 % of warp stops occur in the leno and catch selvedge area. With the deployment of the EcoLeno®, these short-term stops are reduced to an absolute minimum. Warp stops in this area are reduced to a consistent level of below 0.5 %.

Changes in reeded width on jacquard machines

A change in reeded width on jacquard is made a very simple operation. The complete EcoLeno® device is simply reinserted between the harness cords in the predetermined position. Repositioning centrally located harness cords for the catch selvedges and lenos, in the way it had to be done up until now, is completely unnecessary. This constitutes a considerable reduction in the time required when changing the reeded width on a jacquard machine.

Selvedges with improved appearance and better quality

Air jet weaving machines usually operate without a catch cord on the lefthand side. Depending upon the style being woven, the lefthand selvedge fringe is left extraordinarily long, causing problems during the subsequent processing of the fabric. Particularly in the case of fabrics that are subsequently printed, such a selvedge can cause premature wear of the rotary screens. And in the fabric coating process, the clips on the tenter frame can become clogged since the long fringe in the selvedge has a tendency to pick up an excessive amount of coating material. This in

turn necessitates a premature and very expensive cleaning of the tenter frame clips. EcoLeno® technology in this case enables a low cost catch selvedge to be used on the lefthand side of air jet weaving machines so that the expensive detrimental effect of the long selvedge fringe in finishing can be avoided. Above all, commodity fabric weavers supplying large quantities of fabric to finishers, who subsequently resell the fabric, will certainly benefit from the use of this technology.

Modular construction and versatility

As a result of the modular construction of the EcoLeno®, this can be reconverted at any time to the Disc-O-Leno® for special applications. Starting from the third quarter of '97, weaving machines supplied with the Disc-O-Leno® can be converted at any time to operate with the EcoLeno®. For DORNIER air jet weaving machines it is already possible to quickly change from the EcoLeno® to the pneumatic tucking device, or vice versa.

The EcoLeno® will be introduced on the market during the fourth quarter of '98. Likewise, orders can now be placed for retrofitting the device on existing weaving machines already equipped with the CAN-Bus electronic system. It is not possible to generalize as regards the cost advantages to be gained from the deployment of the EcoLeno®. The achievable savings in costs must be calculated on the basis of specific areas of application. For this purpose we are offering our customers a special service. We can calculate the savings on a case by case basis by means of a computer program, thus providing each customer with accurate information based on specific circumstances.

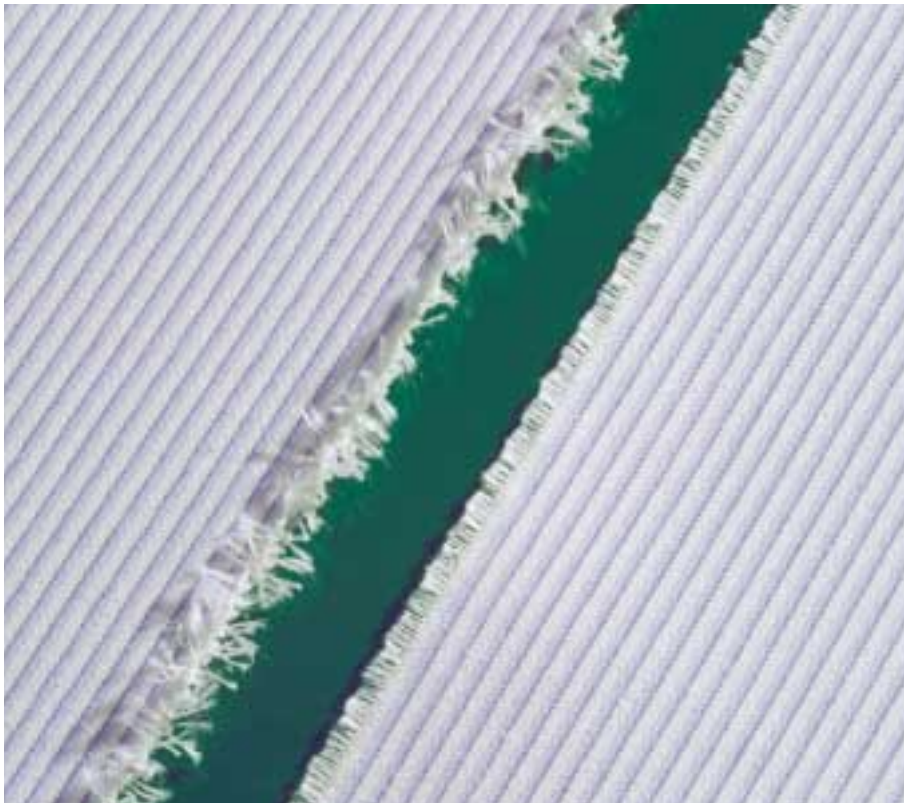

Comparison between the selvedge produced by the classic leno selvedge and the EcoLeno®

Various types of fabric with EcoLeno® selvedges

QUICK CHANGE FROM TUCKED TO LENO SELVEDGE ON DORNIER AIR JET WEAVING MACHINES

In order to stay competitive, many weaving plants must also be universal in the formation of fabric selvedges. Special end product requirements, fabric quality requirements and consideration of the finishing process require the manufacturer to produce fabrics with tucked selvedges and also leno selvedges on one and the same weaving machine.

While fabrics for tablecloths, grinding wheels and tirecord must exclusively be woven with tucked selvedges, alternatively fabrics for shirts, ladies outerwear, linings, jeans, decorative or upholstery usage and mattress ticking are preferred with leno selvedges. In case of wool fabrics, napery, sheeting, terry-towels and fabrics that are subsequently coated, the situation can be such that either leno or tucked selvedges are required by the enduser.

Up until now changing from one type of selvedge to the other was both work intensive and time consuming, involving the use of additional machine parts especially when a change in reeded width was additionally involved. Then in such cases width-related parts on the weaving machine had to be changed and/or modified. With the DORNIER Air Jet Weaving Machine it is now possible through constructive improvements to make the change from a leno selvedge to a tucked selvedge, or vice versa, in just short of 30 minutes. This is primarily due to the use of components that are modular in construction.

The temple mounting brackets are new and engineered in such a way that they can be used to mount the PneumaTucker® tucking device and also the filling clamp. In the case of a change in reeded width, the left and righthand temple mounting brackets can simply be moved along the profiled traverse that supports them. Since the Pneuma-Tucker® is fully electronically controlled, the need for a drive shaft is eliminated and consequently no width-related adjustments are necessary. This mounting system, used for both tucked and leno selvedges, also offers the advantage of being extremely userfriendly.

Mounting of leno selvedge device

Mounting of PneumaTucker®

With the machine running, the tucking device and the filling clamp can be set in the optimum position, horizontally in the direction of the warp as well as vertically. A fine adjustment is possible and settings are reproducible.

Both devices require only limited maintenance because they are composed of stable components that are electronically controlled. In the case of the Pneuma-

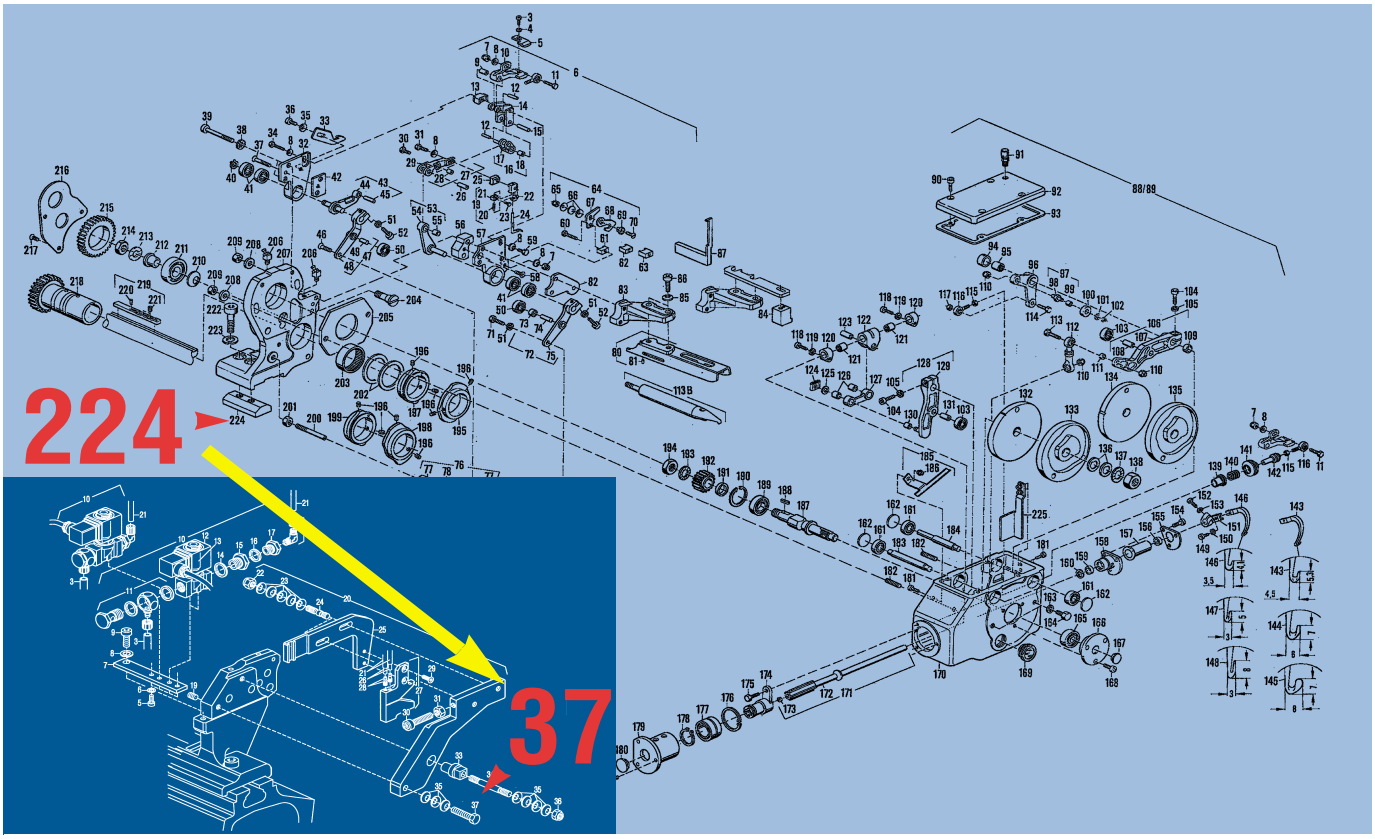

Comparison between the PneumaTucker® and the mechanical tucker, illustrating the difference in the number of parts

Tucker®, the machine elements directly related with the tucking operation are continuously monitored and any malfunction is displayed on the main screen. This technology provides the weaver with a modular designed and engineered system. A system that enables the weaver to quickly and safely produce superior quality selvedges that fully meet the wishes of the enduser.

During the last ATME textile machinery exhibition in Greenville, South Carolina, USA, Mr. Roger Milliken, CEO of the American textile conglomerate that carries his name, during an address to the textile machinery manufacturers said, "Your task must be to simplify complexity". The fact that we are constantly working toward this goal can be readily appreciated by comparing mechanical tucking devices with the DORNIER PneumaTucker®. While 224 individual parts are required for a mechanical tucking device, the PneumaTucker® necessitates only 37 parts. Thus by simplifying function a reduction in the number of parts and an increase in reliability are the inevitable consequence.

Changes in customer service

Effective May 1, 1998 Mr. Fridolin Plaickner has assumed the management of the "KDM" department and thus the responsibility of assigning our weaving machine technicians. He takes over this position from Mr. Hermann Beulker, who has now transferred to the department responsible for preowned machine sales.
Mr. Plaicker was active in external customer service for auditing weaving installations, consulting, installation of weaving machines and weaving machine evaluations during the period 1985 through 1995. During the past three years he has been a technical consultant in the KDT department. These are ideal prerequisites for his assignment to this intensely customer-oriented position.

He can be reached at the following number:
++49 8382 703255
Mobile 0172 8649547

Extended service hotline from June 1, 1998

Extended service facilities for questions regarding textile technological, mechanical and electrical matters. We can be contacted at the usual numbers Monday through Friday
from 7.00 to 20.00 hours and
Saturdays from 8.00 to 12.00 hours

IMPRESSION

Publisher and copyright
Lindauer DORNIER GmbH
Rickenbacher Str. 119
88129 Lindau, Germany
Phone (++49) 8382 / 70 30
Fax (++49) 8382 / 70 33 86

Editor:
Egon Wirth

Printing:
Lindauer Druckerei Eschbaumer GmbH & Co.
D-88131 Lindau

Publishing frequency:
One or twice each year
Date of this issue: June 1998

Specialized in fine shirting fabrics

COTONIFICIO ALBINI SPA – A FAMILY BUSINESS WITH A DYNAMIC APPROACH

The Italian company Albini was founded by Dr. Silvio Albini in Albino, Province Bergamo in 1876. From the very start and to this day, the company is family owned and operated, at this time by the fourth generation.

By clearly defining assignments in the management of the company, Silvio is CEO responsible for sales, Andrea, Vice President Manufacturing, Stefano, CFO and Fabio is Vice President Fabric Development, a strong synergy exists between the individual departments with a dynamic approach to decision making. This leads to a very quick response to the wishes of customers, a great deal of creativity in fabric development and styling and provides a decisive impulse also in plant operation.

The particular strengths of the company that have made it a leader in its field include very modern designs, in part avant-garde, the exceptional fabric quality and an optimum price/performance ratio of its products that are exported and recognized throughout the world.

The strong market position attained by the company has also been influenced by ongoing and decisive investments in new equipment.
As a matter of fact, during the last five years, in other words between 1992 and 1997, some Lit 80 billion were invested. This has meant not only the entire complement of machines has been replaced, but also emphasis was focused on new storage facilities, information systems, logistics and an intensive and comprehensive personnel training program.

With a core of employees numbering 520 persons and a sales volume of 13 million meters of fabric in 1997 (of which 5 million meters were produced by commission weavers), the company's gross sales reached Lit 165 billion. In comparison with 1992 this is equivalent to an increase of 300 % in gross sales.

In the same year, the company paved the way toward this extremely positive result with knowledgeable forethought, as Cotonificio Albini purchased the oldest and most famous three names in the shirting business. These were the English companies Thomas Mason, David and John Anderson and Ashton Shirtings, each with two centuries of history behind them. The exclusive fabrics produced by these three companies are supplied among other customers to the well-known shirtmakers

DORNIER rapier weaving machine installation at Albini SpA

in London's Jermyn Street where world-famous personalities have their shirts custom tailored. Heading the illustrious list of customers is the British monarchy.

Seventy-five percent of production is exported, predominantly to customers in Europe, USA, Japan and the Far East.

The basis of the high level of quality fabric in poplin, twill, oxford, stripe and check patterns, piece-dyed and yarn-dyed starts with the selection of the best raw materials. This is subjected to very modern and progressive manufacturing processes and very stringent quality control, with finally every meter of fabric woven being carefully inspected.

The materials being processed include cotton, linen and various blends of both fibers in counts ranging from Ne 30/2 through Ne 170/2. In the case of 100 % linen yarns, the company produces counts of up to Nm 39/1.

Part of customer service includes a timely delivery of goods on order, also including the supply of short lengths of fabric. This necessitates an optimum in the logistical control of material flow through the plant and a very careful and precise scheduling in the preparation and weaving departments.

Also the modern dyehouse is geared to production requirements, with dye lots of 30-600 kg of yarn being processed as an integral part of the total production amounting to 45,000 kg per week.

In order to increase the flexibility of the weaveroom, a decision was taken to adapt the 167 shuttleless machines to QSC technology, in order to ensure a quick change of style on the weaving machine, thus minimizing downtime.

According to Mr. Andrea Albini, Vice President Manufacturing of Cotonificio Albini, in 1996 42 DORNIER rapier weaving machines were purchased in order to be more versatile in the production of predominantly fabrics requiring a high number of harness frames and also in order to meet the demand for styles requiring two warp beams. The careful handling of the filling by the DORNIER Weaving System, in other words the low filling pick up speed, short rapier overstroke and optimized contour of the cams in the gearboxes for rapier movement, made the weaving of low-strength cotton yarns and expensive linen yarns at a speed of 515 ppm economically feasible.

Through the dynamic management of the company, the high technological level of the manufacturing equipment, the finely tuned logistics and a very well trained and motivated group of employees, Cotonificio Albini has the capability to face the ever increasing challenges of the international market in the future.

A selection of typical Albini shirting fabrics marketed under the "Thomas Mason" brand name

COMPETENCY IN PERSONNEL TRAINING AS THE KEY TO SUCCESS

The enormous speed in the development of the weaving machine and the new European Union guidelines make the ability to quickly access information and follow an intensive training program absolutely essential. The Lindauer DORNIER GmbH Training Center KDS exists entirely for these purposes. This department is responsible for documentation, training and the production of spare part catalogs. The quality of this special and diverse area of customer service forms the foundation for the reliable operation of DORNIER weaving machines around the world.

New seminar room for instruction on software programs

Based on the decisive and increasing significance of our training facilities, four new rooms for seminars were added during the second half of last year totaling 330 m² of floor space.

Various types of air jet weaving machines and a terry weaving machine are now located in two of the new rooms for the training of technicians delegated by customers. The corresponding course programs consist of a basic course lasting two weeks and customer-oriented practical instruction in a series of short individual sessions covering special applications and subjects related with the mechanics of the machine. The same applies to technician courses for the rapier weaving machine that run parallel to these courses in the old training facility. In the third of the newly constructed seminar rooms, training is provided for the weaving machine software programs DoTech and DoStyle, while the fourth room is predominantly utilized for the training of customers' electricians and relates to the technology of the new main machine console.

New facility for seminars

This considerable investment will ensure that also during the coming years we will be able to fully meet the anticipated increase in the demand for training of customers' personnel.

Other responsibilities and assignments handled by our KDS department include:

- Preparation and constant updating of manuals for DORNIER air jet and rapier weaving machines.
- Preparation of spare parts catalogs in hard copy form and on CD-ROM (for EPOS application).
- Translation of handbooks, catalogs and instruction manuals for customers in more than 14 foreign languages.
- Adapting the description of modular engineered components to the specific EU guidelines. At this time the amount of work involved requires an extensive commitment from all our staff associated with this assignment. This is due to the fact that the customer should only be provided with a manual in which the description of those components that are actually built into the respective machines are included. Each individual manual is put together with the aid of a computer.
- Courses for weaving technicians either in Lindau or directly at the customer's location. During the last few years an average of about 430 persons per year have been trained in the operation and maintenance of our air jet and rapier weaving machines.
- Electrician courses attended by some 150 persons per year.
- Seminars for customers covering the application of the weaving machine software programs DoTech and DoStyle. These are held in Lindau or at the customer's location. At this time, attendance is in the region of 100 persons annually.

Under the management of Klaus Dieter Voß and his deputy, Mr. Mario Mega, a competent team of highly specialized associates shows a serious commitment to optimize methods of training, concentrated on practical application in the fulfilment of their complex assignments. In addition to both male and female instructors, this team includes technical editors, expert female staffers and also a group of external translators that communicate with us via email.

The 40,000th DORNIER Rapier Weaving Machine

The DORNIER weaving installation at Munzert GmbH & Co.

At the end of April, Gebrüder Munzert GmbH & Co. in Marlesreuth, Germany received the 40,000th DORNIER Rapier Weaving Machine as part of a repeat order.

Founded 73 years ago, this company has been a DORNIER customer for many years, and as long ago as the end of the 50's invested in DORNIER flyshuttle looms for the production of damask fabrics.

During the following years close contact with customers led to the company specializing in the production of upholstery and decorative fabrics. For this purpose only DORNIER rapier weaving machines have been purchased starting in 1970. As a result of ongoing modernization of the plant, a total of 171 weaving machines have been purchased over the years.

This continuous investment in state-of-the-art technology, carefully matching designs to customer requirements and the quick response in manufacturing, also in the case of short orders involving as little as 30 meters, has enabled the company to gain a strong position at the top of the mid-market segment.

Gebrüder Munzert's weaving operation is one of the 70 predominantly mid-size family owned companies located in northern Bavaria. With its quality products that meet the highest demands, the company is a leader in its field, both nationally and internationally. About 35 % of the fabrics produced are exported not only to predominantly European customers, but also to the USA and Japan.

The customer profits from an archive containing some 10,000 designs and an inventory of 1,200 different types of yarn. Many of these yarns were developed in cooperation with spinning mills, including a high-twist chenille yarn with excellent wear properties. The fact that the company has had no complaints during the last six years is sufficient testimony to its high standards of quality.

Mr. Klaus Munzert (left) in discussion with Mr. Siegfried Sachs of DORNIER

Finely tuned logistics as the basis for versatility

WALTER REISSMANN GMBH & CO. – INTERNATIONAL FASHION IN WEAVING

"We see ourselves as a service company integrated with a weaving operation" says Mr. Werner Reissmann, owner of the company with the same name and located in Münchberg, Germany. "The market really isn't interested in how a product is manufactured, but more in the right kind of service, consisting of quality, delivery time and value". And this is the focus of the house of Reissmann.

The father of the present owner founded the company in 1948, a company geared to the production of fabrics for ladies' outerwear. Originally, commission weavers located in the same area produced the fabrics developed by the company. Not until the 60's was the investment made in the company's own weaving operation, while continuing the association with efficient and productive commission weavers.

Upper Franconia – land of textiles

Significant advantages for Upper Franconia – a land of textiles – are historical tradition and structure comprised of medium-sized companies. Today this is the most important textile producing region in Germany. A tradition involving owner-operated companies of a manageable size, in spinning, weaving, dyeing and finishing, fabrication and last but not least a multiplicity of commission twisters, winders and weavers, together forming a unique and competitive textile industry. In this way, each individual company is able to concentrate on its core business, objectively develop its products and in consequence be in a position to quickly react to market needs and requirements. And all this without having to forego the knowhow and experience of prior and subsequent processes available from other companies located near at hand in the same area.

Parallel with this textile infrastructure are institutions that provide a workforce of qualified personnel; for example, the state-run vocational community college for textiles and apparel in Münchberg and Naila and the textile university in Münchberg.

As a result, it is not surprising that an innovative network of enterprising textile employers, the Münchberg-Helmbrechts Textile Center, has been formed. Since 1995 this innovative circle of textile entrepreneurs, in addition to Reissmann, includes a further 11 companies with collectively DM 800 million in gross sales and a total of 3,000 employees. This is a rather unusual strategic alliance, since in part it is comprised of companies in direct competition with each other. Nevertheless, members place greater emphasis on securing the future of the local textile industry by working together toward common goals. In addition to collective seminars for management personnel, work-study groups have been formed for matters related to purchasing, apprentice training programs, improving the image of the industry and the introduction of the common European currency.

Selection of fabrics produced by Reissmann GmbH & Co

DORNIER air jet and rapier weaving machines in a Reissmann GmbH & Co. weaveroom

The manufacturing program of Reissmann GmbH & Co.

Reverting to Reissmann, today exclusive and fashionable fabrics are produced for ladies' outerwear from virgin wool and modern blends. These fabrics are supplied to brand name ready-to-wear clothiers in Germany with 35% being exported not only to other European countries, but also USA and the Far East. Based on its own collection, the company also produces exclusive collections for individual customers.

In order to be in a position to safely and economically produce this multiplicity of basic and fashion-oriented fabrics from wool, man-made fiber, fancy and stretch yarns in counts ranging from Nm 5 to Nm 120/2, the company decided on the DORNIER family of weaving machines in 1995, the installation consisting of 12 air jet and 51 rapier weaving machines. The choice in the type of weaving machine is part of Reissmann's overall concept, centered on a flexible and quick response to the wishes of its customers.

To be in a position to supply 500 styles per season in up to 15 colorways per design and also involving short lengths, emphasis was placed on the utilization of the QSC System for quick style change. All weaving machines are equipped with the pneumatic harness frame connection system (PSL) and combination harness frames, so that they can be used universally on both the air jet machines and the rapier weaving machines. The efficient throughput from the drawing-in department to the weaving machine with the respective utilization of support equipment provides the basis for short changeover times in the weaveroom. Sample section warping machines in combination with the most modern section warping equipment that includes automatic leasing devices complete the overall picture of a very flexible manufacturing facility.

In addition to the in-house design staff utilizing CAD/CAM, the success of the company has been decisively influenced by finely tuned logistics that enable a finished sample of fabric in extreme cases to be produced in as little as 48 hours. A fully automatic yarn storage system, requiring no personnel, indicates at any time required what the actual stock of materials is, at the press of a button, supplying the material to the production machines in a matter of minutes. All information is transferred via a computerized central control system from the CAD/CAM station directly to the production and final control machines.

It's quality that's produced

In this company quality is produced, not measured. However, Reissmann leaves nothing to chance. In the most modern testing laboratory available today, equipped with the Uster Tester, Uster Tensojet and a whole range of additional testing instrumentation, the company tests incoming yarn and also carries out quality checks at various stages in the production flow through the plant. This is supplemented by a 100 % final control of quality.

In order to be adequately equipped for the future, each year 5-8% of gross income is invested in new technologies. And since the best of machines without good personnel is only worth half its value, Reissmann places great emphasis on the instruction and training of personnel as a major building block to the success of the company. As a result, at any given time 8 % of total personnel consists of apprentices.

Innovation in manufacturing, processing and service combine to form the motor that drives Reissmann into the future and gears the company to inevitable change.

HIGH PRODUCTION CAPACITY UTILIZATION AND LEVEL OF ORDERS BOOKED DURING 1997

In fiscal 1997 both income and earnings were substantially higher in comparison with the previous year, primarily due to a good utilization of our production capacity. For the first time the company was successful in increasing total revenues to in excess of DM 500 million, income generated from speciality machines being particularly significant in this respect.

After a relatively slow start during the first quarter, orders for weaving machines increased during the rest of the year, accompanied by corresponding incremental increases in production.
An order received from a customer in Turkey for over 250 DORNIER double-width air jet machines for the production of sheeting contributed to the good level of earnings achieved from the sale of weaving machines. With further significant orders received from weavers producing multi-colored cotton fabrics, decorative and upholstery fabrics, Turkey became the largest single market for DORNIER weaving machines.

In the United States the DORNIER Rapier Weaving Machine maintained its strong market position in 1997. Also in the case of air jet weaving machines, our success in the sale of our machine in such specialized areas as awning fabrics and double-width apparel, decorative and upholstery fabrics continued to grow.

In Germany we have experienced a revival of business for weaving machines with significant orders being booked for air jet and rapier weaving machines that has continued into 1998.

The level of business in the UK showed a strong increase with significant orders being booked for air jet machines to produce air bags and rapier weaving machines for the wool and linen industries.

In Belgium, France and Italy business has remained stable. Also satisfying is the revival of business in South and Central America and also the continuing stability in the most important markets in Eastern Europe.

This successful business development has certainly been influenced by activity in R&D, with an expenditure of 8 % of gross income generated by the company. The focus of R&D has been concentrated on the series introduction of a new generation of electronic monitoring and control of the weaving machine with graphical display, new selvedge formation devices, and also an increase in the performance level of the rapier weaving machine and versatility of the air jet weaving machine.

The economic crisis in the Far East has thus far had no adverse effect on our weaving machine business. On the contrary, during the first four months of the current fiscal year, we have experienced no change in the level of orders received and reckon with full employment in this segment of our business throughout fiscal 1998.

The owner of our company Mr. Peter Dornier with his son Mr. Peter D. Dornier

16

TEXTILE FINISHING MACHINES FROM DORNIER

Combined mercerizing and bleaching range from DORNIER

Lindauer DORNIER GmbH has extensive experience and knowhow in the development and manufacture of textile finishing machines, generated by almost 50 years of activity in this field. The manufacturing program was started in 1950 as a result of a licensing agreement with the then textile machinery manufacturer, Haubold, located in Chemnitz, Germany. The original program included a continuous mercerizing machine for woven fabrics, in addition to tenters and foulard machines.

As the need for tubular knit goods finishing arose during the 70's, a machine for the continuous mercerization of these fabrics, using patented circular expanders, was developed in cooperation with the Swiss company Terlinden, and was first marketed in 1979.

DORNIER thus responded to the market demand for the treatment of tubular knit goods in their natural form in order to maintain accuracy and consistency in finishing throughout the width and length of the fabric being processed. During subsequent years this system was developed into a family of machines covering singeing, mercerizing and a combined wet-in-wet finishing range for continuous mercerizing and bleaching.

Mercerization assures fabric luster and dimensional stability

Mercerized tubular knit goods produced from cotton, cotton blends, cotton/Lycra and more recently also Tencel are distinguished by such good qualities as: reduced tendency to skew and very little pilling effect after washing, permanent luster, brilliance and depth of color, soft and silk-like hand, high degree of elasticity, significant saving in dyestuffs (up to 30 %) as well as excellent dimensional stability in length and width.

First and foremost, the impressive results achieved in the luster and dimensional stability of the finished fabric are primarily due to the precise control of fabric tension throughout the entire mercerizing process. The conditions created at each stage in the processing cycle are also significant, within the inlet and impregnation sections of the machine, and particularly in the critical stabilization process.

Due to the DORNIER concept based on patented circular expanders as already outlined, during every stage of processing the tubular knit fabric is evenly tensioned in its natural tubular form at all times. This results in a very reliable stabilization without selvedge marks. The following information emphasizes the technical features of the principle of circular expander technology.

The adjustment in the diameter of the circular expanders from 10 to 40 inches (254 to 1016 mm) is motorized. These circular expanders are freely suspended in the washing towers and are held in the vertical position by concave rolls. Conforming with the circumference of the circular

expanders, the spray rings provide for an even spraying of the tubular knit fabric with water at a temperature value of approximately 80° C .

As a result of this unique concept, a very even stabilization and washing over the entire circumference of the tubular fabric is achieved. The arrangement of the respective stabilization, washing and neutralizing zones is constantly maintained at an angle of 90°, ensuring that there is no mesh distortion whatsoever in the knitted fabric during mercerization.

The complete range is modular in concept, enabling for example the number of circular expanders to be increased at any time through the addition of further modules. There are many advantages including the possibility on the part of the enduser to customize the dimension of the range to his own specific requirements.

Efficient linking of the mercerizing and bleaching processes

Particularly mid-size tubular knit goods finishers very often do not fully utilize their mercerizing equipment round the clock due to the relatively small amount of tubular knit goods to be finished. In order to be in a position to offer such customers a more economic solution, DORNIER developed a linked system. This is designed for alternatively mercerizing and bleaching with one and the same machine. As a result an ideal solution from the technical and commercial standpoints has been found, to install a range tailored to available capacities according to individual requirements.

The unique method of operation offered by this system ensures the treatment of the fabric without the danger of creasing, a high degree of whiteness and accurate reproducibility of previously attained results. In addition, environmentally friendly and harmless peroxide bleach is utilized in conjunction with the pad-steam process.

This combined wet-in-wet finishing range consists of an inlet section, the peroxide impregnation trough, a preheating chamber, the dwelling chamber, and in accordance with requirements two to four washing sections, the neutralizing bath and plaiter.

The goods pass via the inlet section into the impregnation trough and are soaked in the peroxide bath. Thereafter, the knitted fabric passes through the heating unit where it is heated to such an extent that the reaction process begins. The subsequent pad-steam operation in the dwelling chamber takes about 20 to 40 minutes. Washing out the chemical agents takes place with the use of two to four washing sections.

An optional module can be added for brightening and softening the fabric after processing in the washing towers. Furthermore, the possibility is provided for the addition of a demineralization process with impregnation and a reaction section prior to the peroxide impregnation process.

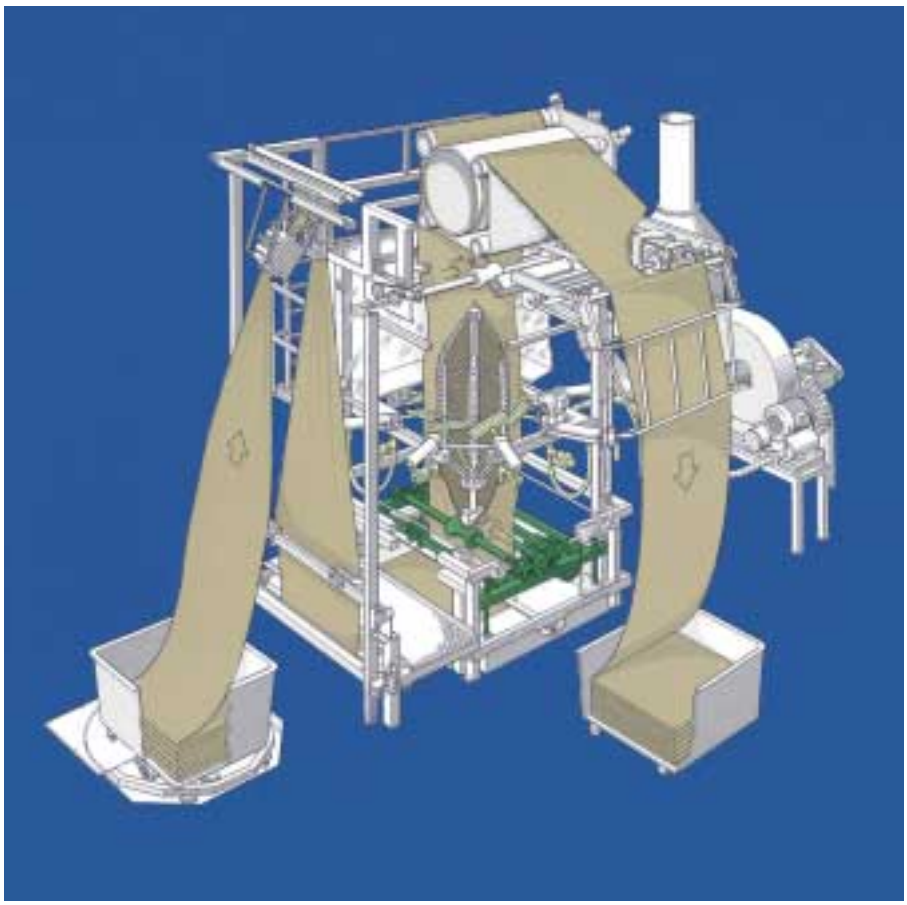

The DORNIER singeing machine

A circular singeing concept, providing exceptional productivity

Due to the mechanical handling of the knit goods during the processing cycle, a certain amount of yarn hairiness to one degree or another is inevitable. This hairiness increases as the count of the yarn becomes coarser. The same applies as regards modal fibers. In order to reliably prevent the yarn from pilling, even after a number of washings, the deployment of a singeing process for grey knit fabrics becomes a desirable feature.

On the basis of the mercerizing and bleaching ranges utilizing the patented circular expanders that have been tried and proven over many years, DORNIER has developed an efficient circular singeing concept. Using this concept, it has been possible for the first time to carry out the singeing process on tubular knit goods without selvedge marks.

The technical process begins with the goods being fed to the circular expander from a turntable and an automatic detwisting device. Located around the circumference of the circular expander are eight swivelling high efficiency burners in circular form. With this arrangement it is possible to direct the full width of each burner segment in the most ideal position in relation to the knit goods being processed, even when the diameter of the goods is changed from one lot to the next. Utilizing this system of singeing, the end result is an absolutely even and constant surface of the knit goods, something that no other method of singeing has been able to achieve.

Since DORNIER is striving toward being a single supplier with a complete family of machines for the treatment of tubular knit goods, additional innovative machines will be developed for the finishing of such fabrics without selvedge marks.

DORNIER'S ADVERTISING CAMPAIGN

Technology which counts.

The controlled center transfer on the Dornier rapier weaving machine facilitates short set-up times, even if using a wide variety of filling yarn counts. The gentle filling insertion action – resulting from the low start-up-speed of the giver rapier at yarn pick-up – the open shed filling insertion, and the absence of guide elements in the shed, prevent filling yarn breaks and missing filaments. These are basic prerequisites for unsurpassed universatility and zero defect weaving as required for example in the case of airbag fabrics. With high quality fabrics, machine amortization is thus achieved through quality and flexibility.

Lindauer Dornier GmbH
D-88129 Lindau/Bodensee
Germany
Phone ++49 83 82 70 30
Fax ++49 83 82 70 33 86

http://www.
lindauer-dornier.com

Quality creates value.

DORNIER

Precision which counts.

Bilateral gearboxes with complementary cams on Dornier rapier and airjet weaving machines optimize fabric quality and flexibility. On double-width-airjet looms, uniform reed beat-up is guaranteed across the entire width. In addition, the definable reed dwell minimizes stress on the yarn and extends the range of application. On the rapier weaving machine, the precise rapier motion ensures gentle yarn acceleration and reliable, controlled transfer. A robust design and mechanical engineering precision guarantee a long service life, low spare parts costs and a high machine resale value.

Lindauer Dornier GmbH
D-88129 Lindau/Bodensee
Germany
Phone ++49 83 82 70 30
Fax ++49 83 82 70 33 86

http://www.
lindauer-dornier.com

Quality creates value.

DORNIER

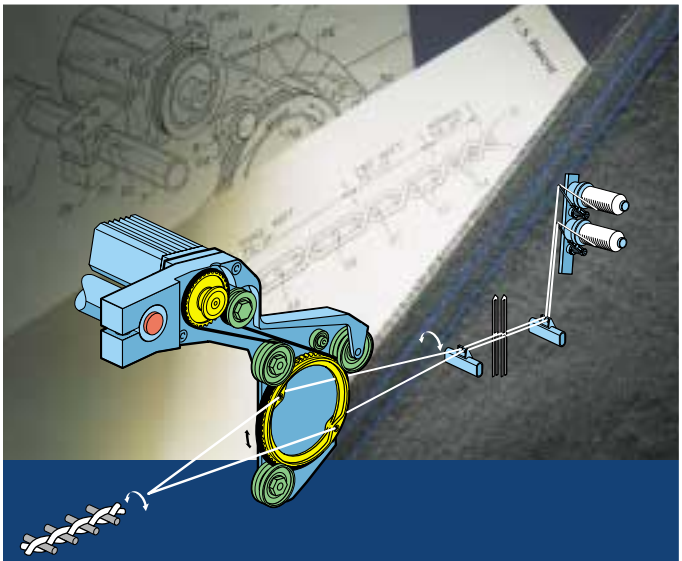

Innovation which counts.

Disc-O-Leno®, electronically controlled, the operator-friendly new technology full leno device for Dornier airjet and rapier weaving machines. The advantages: It permits the use of conventional king bobbins, programmability for all interlacings, two-thread full leno technology, thin but strong selvedges which meet all the requirements of finishing plants, and no limitations imposed on machine speed by the leno device. Functional reliability at maximum speeds and the elimination of leno thread breaks, significantly improve the efficiency of the Dornier weaving machines.

Lindauer Dornier GmbH
D-88129 Lindau/Bodensee
Germany
Phone ++49 83 82 70 30
Fax ++49 83 82 70 33 86

http://www.
lindauer-dornier.com

Quality creates value.

DORNIER

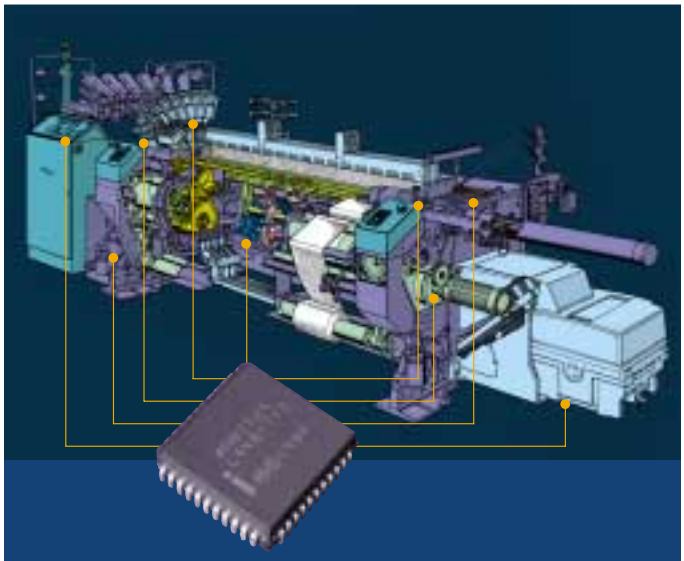

Evolution which counts.

For example the CAN bus, the backbone of a modern, future-oriented, open electronics concept. The CAN bus, a joint development involving Dornier, has been used in the weaving machine system family since 1989 and has thus secured a technological lead for Dornier. Being compatible with future developments, it brings existing machines up to date by integrating colour selectors, yarn tensioners, filling scissors and selvedge forming devices, all electronically controlled.

Lindauer Dornier GmbH
D-88129 Lindau/Bodensee
Germany
Phone ++49 83 82 70 30
Fax ++49 83 82 70 33 86

http://www.
lindauer-dornier.com

Quality creates value.

DORNIER

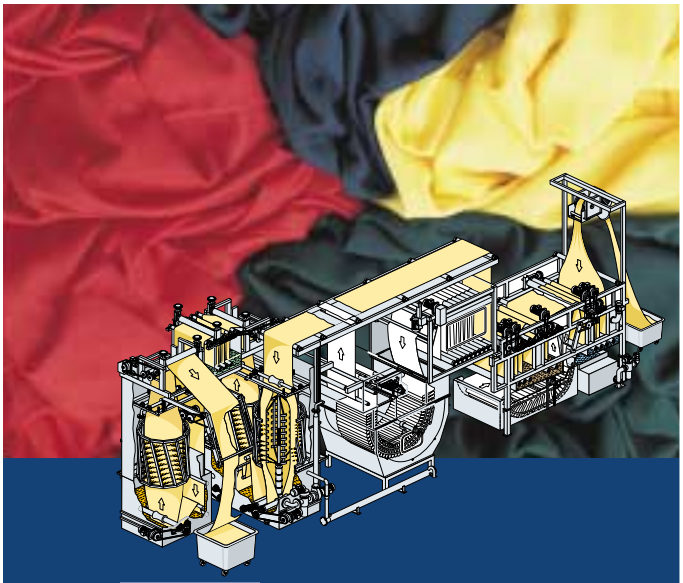

Finishing which counts.

Tubular knit goods finishing with the Dornier circular mercerizing machine ASM has been extended to include singeing SMA and bleaching BSM for all the usual knitted fabric constructions and various cotton blends. The patented, tried and proven circular expander guarantees flawless selvages, consistent and reproducible processing, and prevents creasing of the fabric throughout the entire process cycle. The picture illustrates linked wet-in-wet finishing for mercerizing and bleaching using the pad-steam process on a combi-machine CMB.

Lindauer Dornier GmbH
D-88129 Lindau/Bodensee
Germany
Phone ++49 83 82 70 30
Fax ++49 83 82 70 33 78

http://www.
lindauer-dornier.com

Quality creates value.

DORNIER

Drying isn't everything...

...economical drying and optimum product quality

– that's the right concept!

When it comes to heat-treatment of building boards,

talk to Dornier.

Lindauer Dornier GmbH
D-88129 Lindau/Bodensee
Germany
Phone ++49 83 82 70 30
Fax ++49 83 82 70 33 78

http://www.
lindauer-dornier.com

Quality creates value.

DORNIER

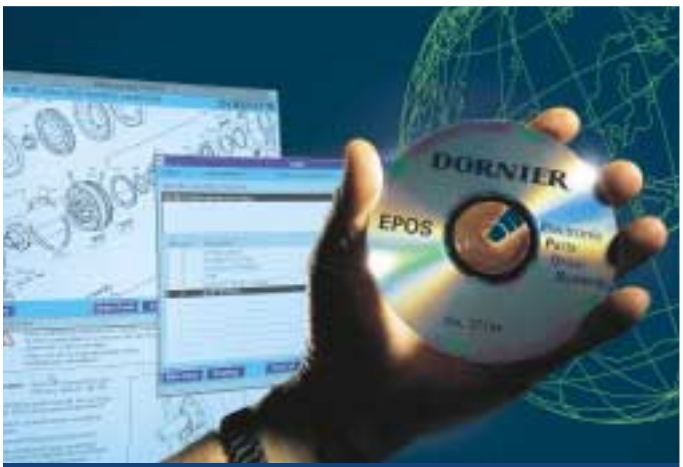

Communication which counts.

Dornier offers all-embracing communication on three levels. The individual machine modules are networked together by the CAN bus, enabling all actions to be executed in real-time. Uniform graphic displays simplify the operation of rapier and airjet weaving machines. The Dornier EPOS programme brings a new dimension to spare parts logistics, allowing customers worldwide to communicate quickly and efficiently with Dornier round the clock via CD-ROM, modem or the internet.

Lindauer Dornier GmbH
D-88129 Lindau/Bodensee
Germany
Phone ++49 83 82 70 30
Fax ++49 83 82 70 33 86

http://www.
lindauer-dornier.com

Quality creates value.

DORNIER

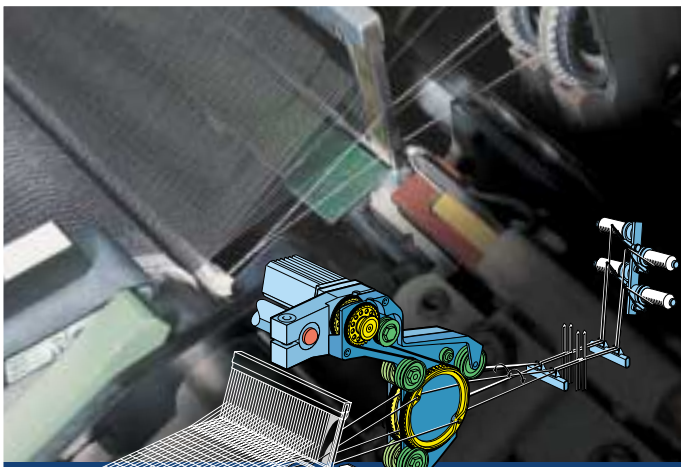

Economy which counts.

High selvedge quality – significantly less selvedge waste – reduced workload – a combination that pays off. The EcoLeno® leno device patented by Dornier is based on practical experience with the Disc-O-Leno® disc leno device. The advantages for Dornier rapier and airjet machines: minimal filling waste, elimination of the catch selvedge ends, fewer ends down in the selvedge area, reduced technician and weaver workload, shorter set up times, and reclaimable filling waste. Due to recycling potential, weaving without filling waste has been realized for certain areas of application on Dornier weaving machines.

Lindauer DORNIER GmbH
D-88129 Lindau/Bodensee
Germany
Phone ++49/ 83 82 / 70 30
Fax ++49/ 83 82 / 70 33 86

http://www.
lindauer-dornier.com

Quality creates value.

DORNIER